TAIL ROTOR

TAIL ROTOR INSTALLATION

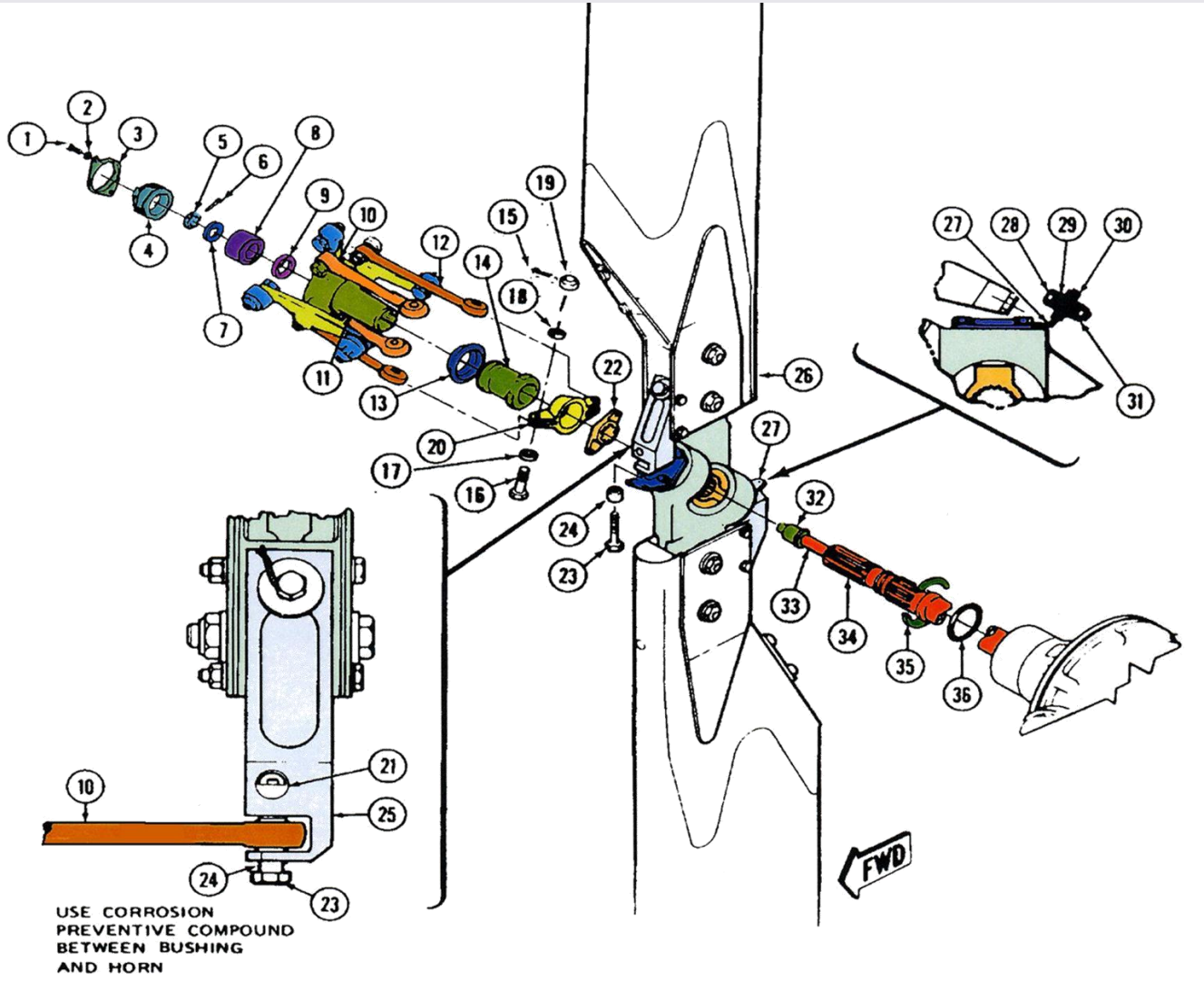

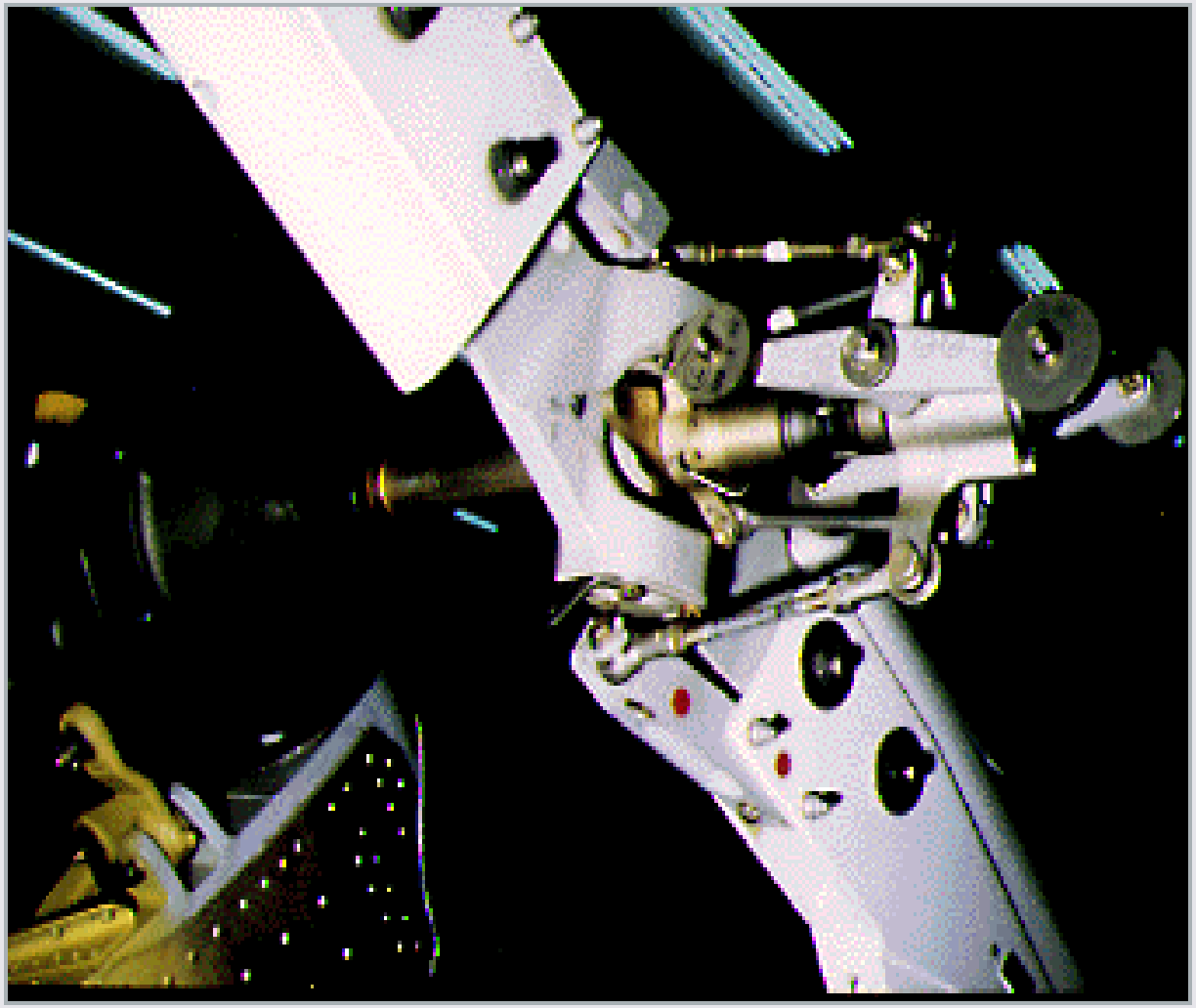

TAIL ROTOR

CROSS HEAD

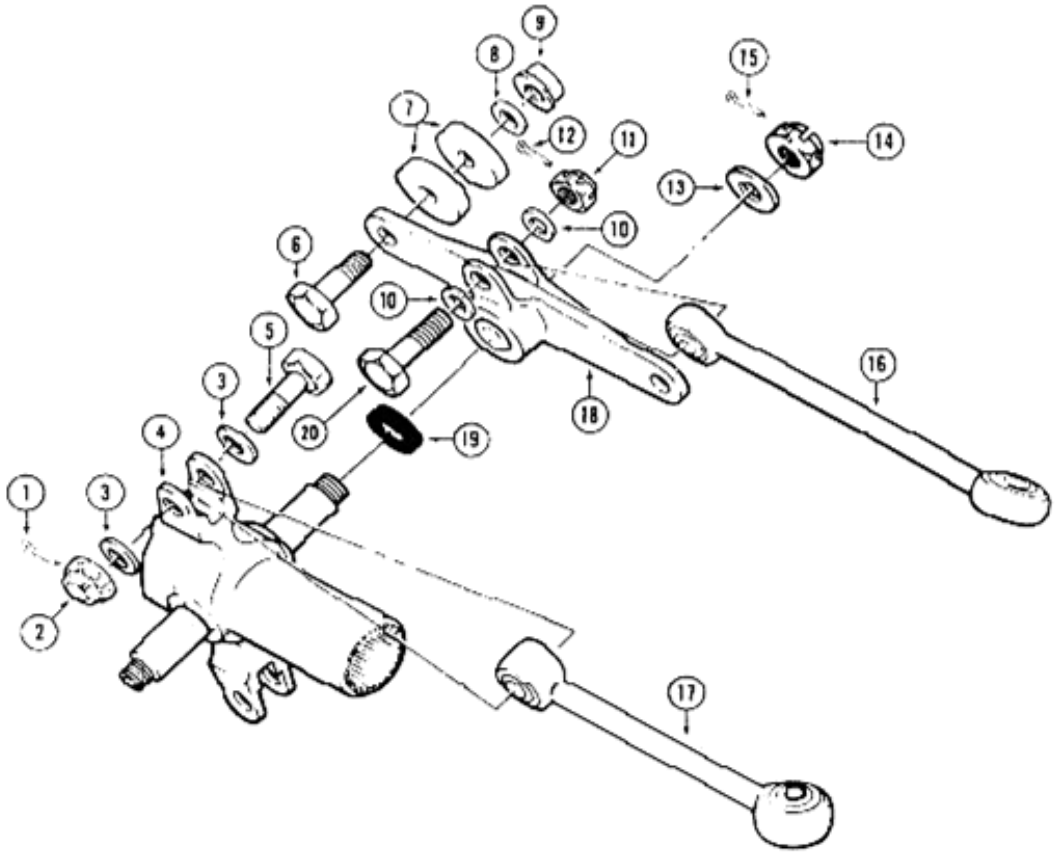

1	Cotter Pin	11	Nut
2.	Nut	12.	Cotter
3	Washer	13.	Washer
4.	Crosshead	14.	Nut
5.	Bolt	15.	Cotter Pin
6.	Bolt	16	Counterweight Link
*7	Weight	17	Pitch Link
8.	Washer	18	Bellcrank
9	Nut	19	Washer
10.	Washer	20	Bolt

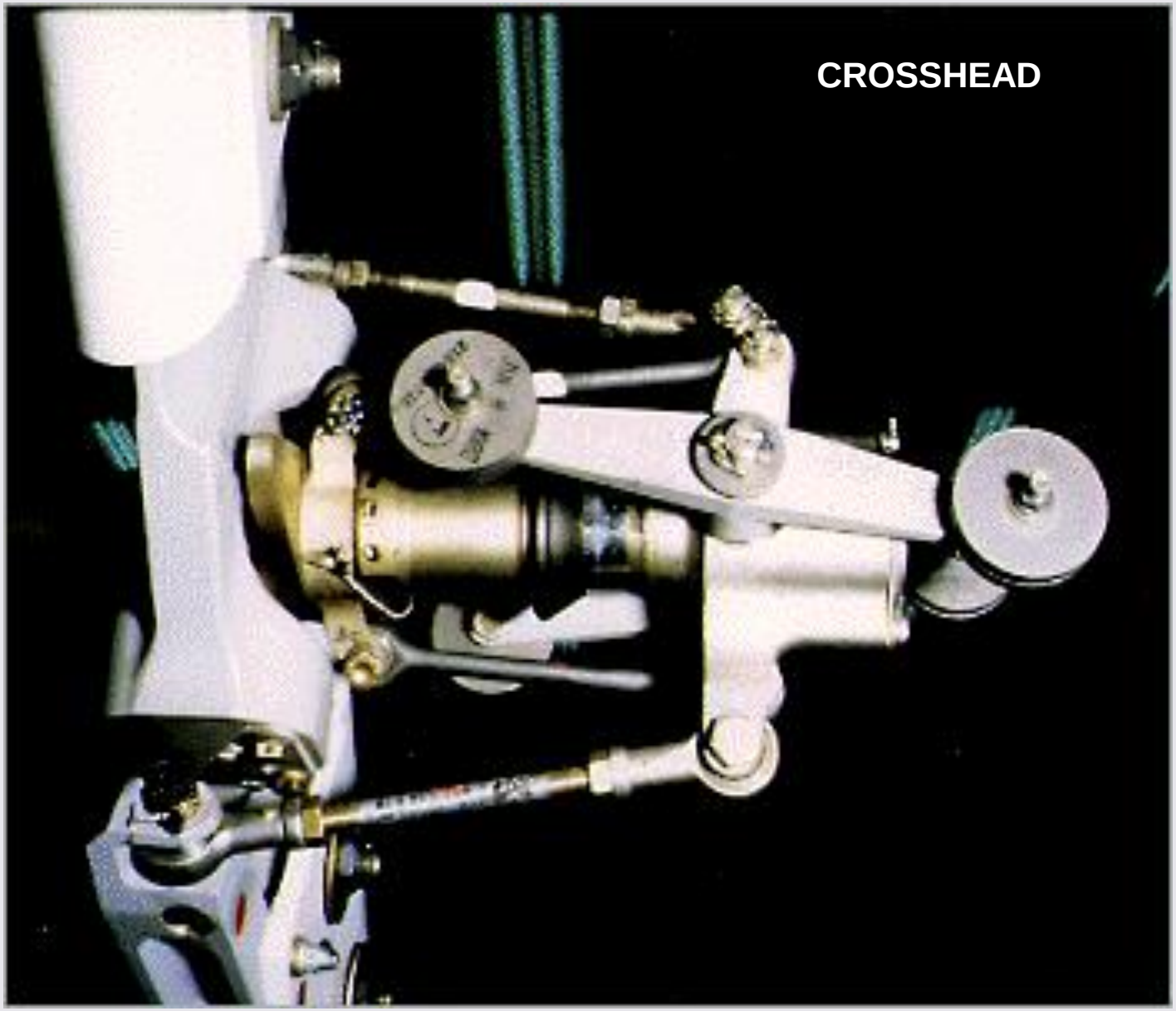

TAIL ROTOR

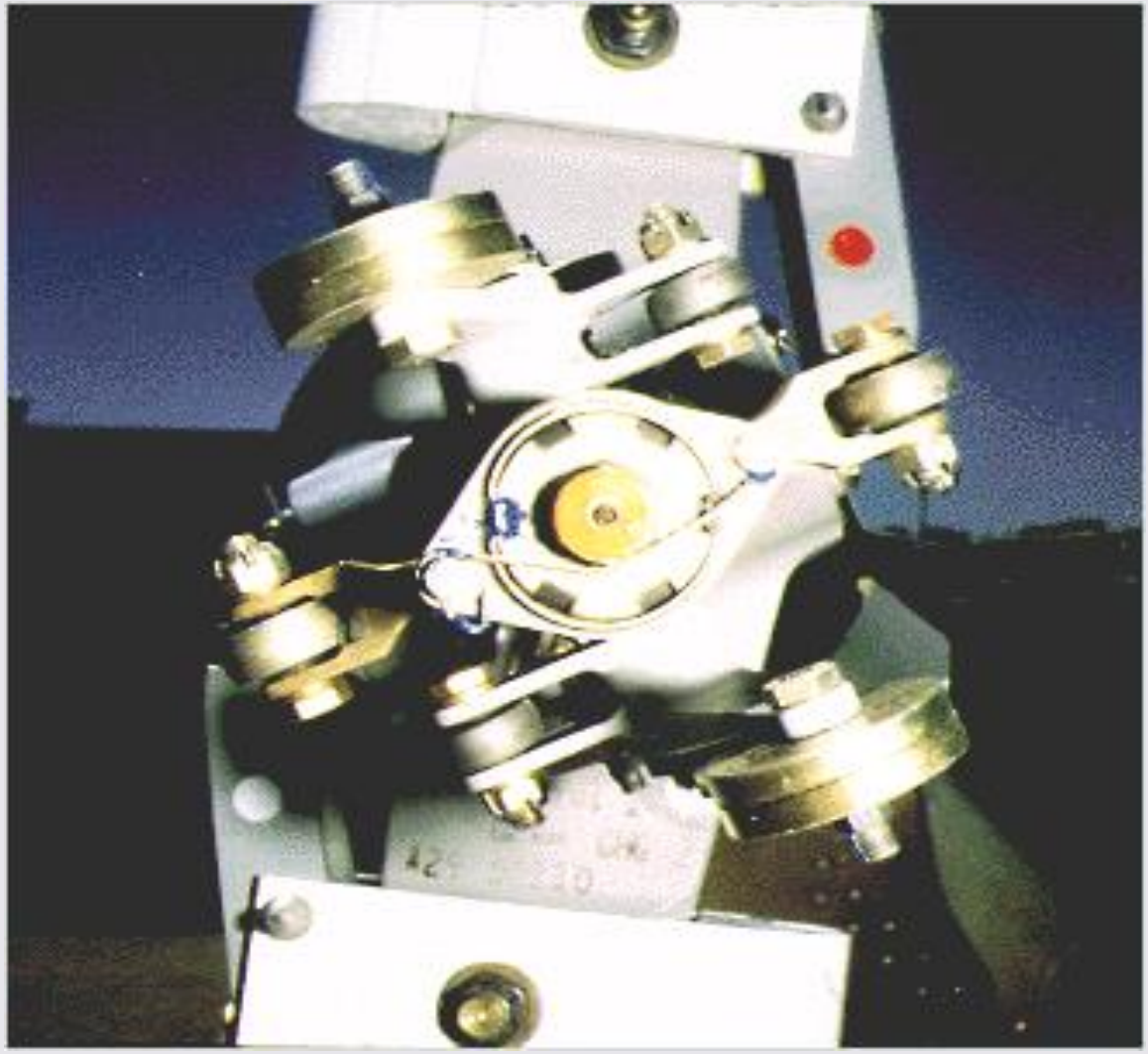

TAIL ROTOR

PITCH LINK

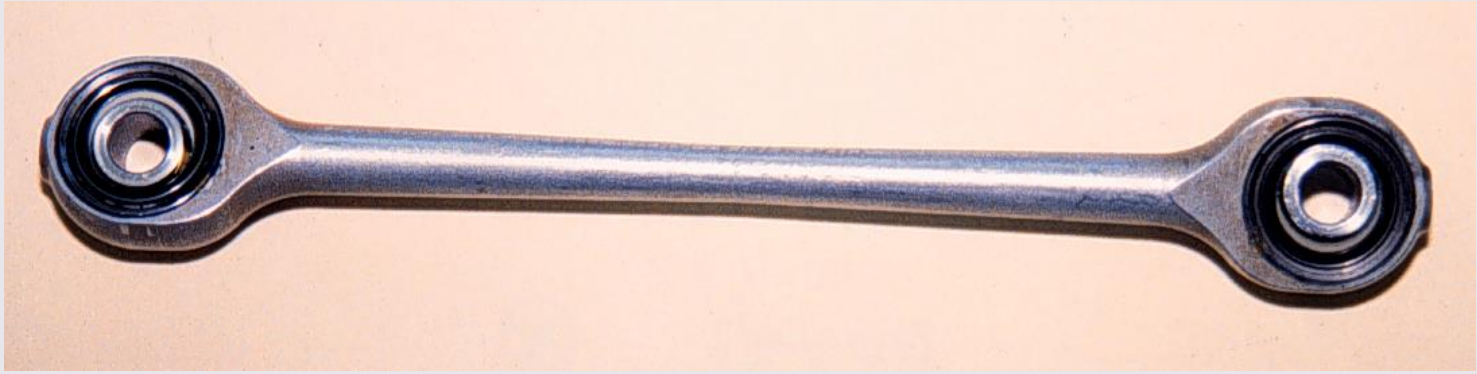

HP/EP TRUNNION INSTALLATION

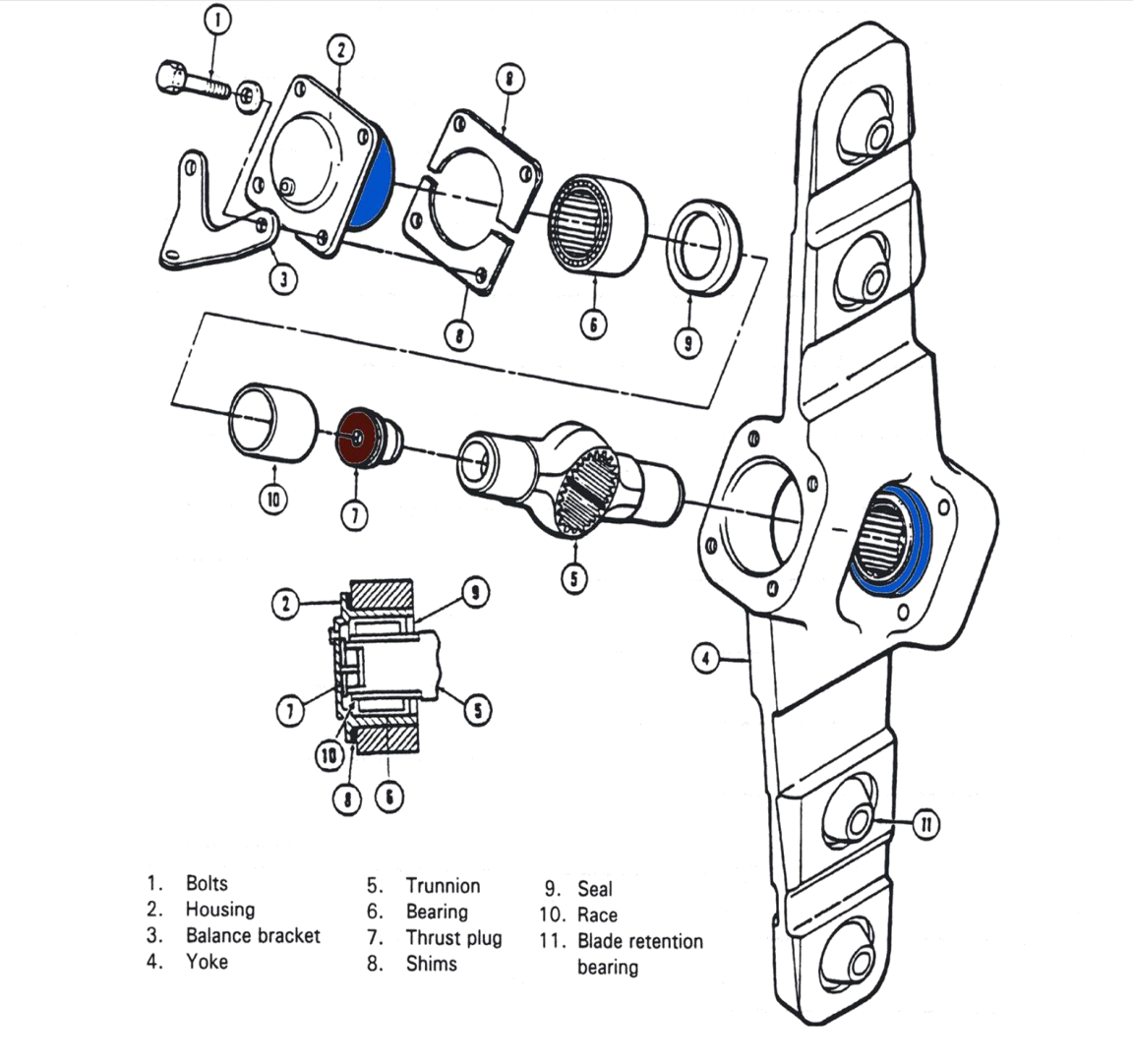

HP/EP TRUNNION CENTERING SHIMS AND THRUST PLUG

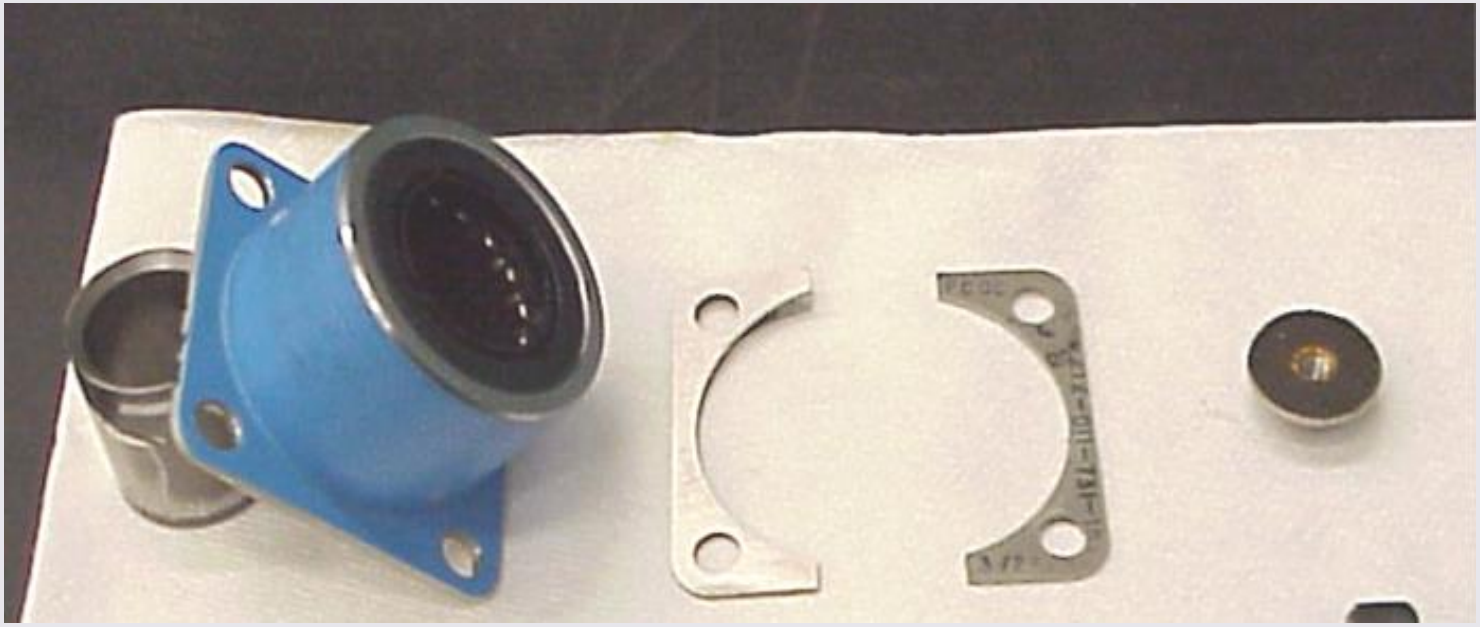

TRUNNION

SP AND PRIOR TRUNNION INSTALLATION

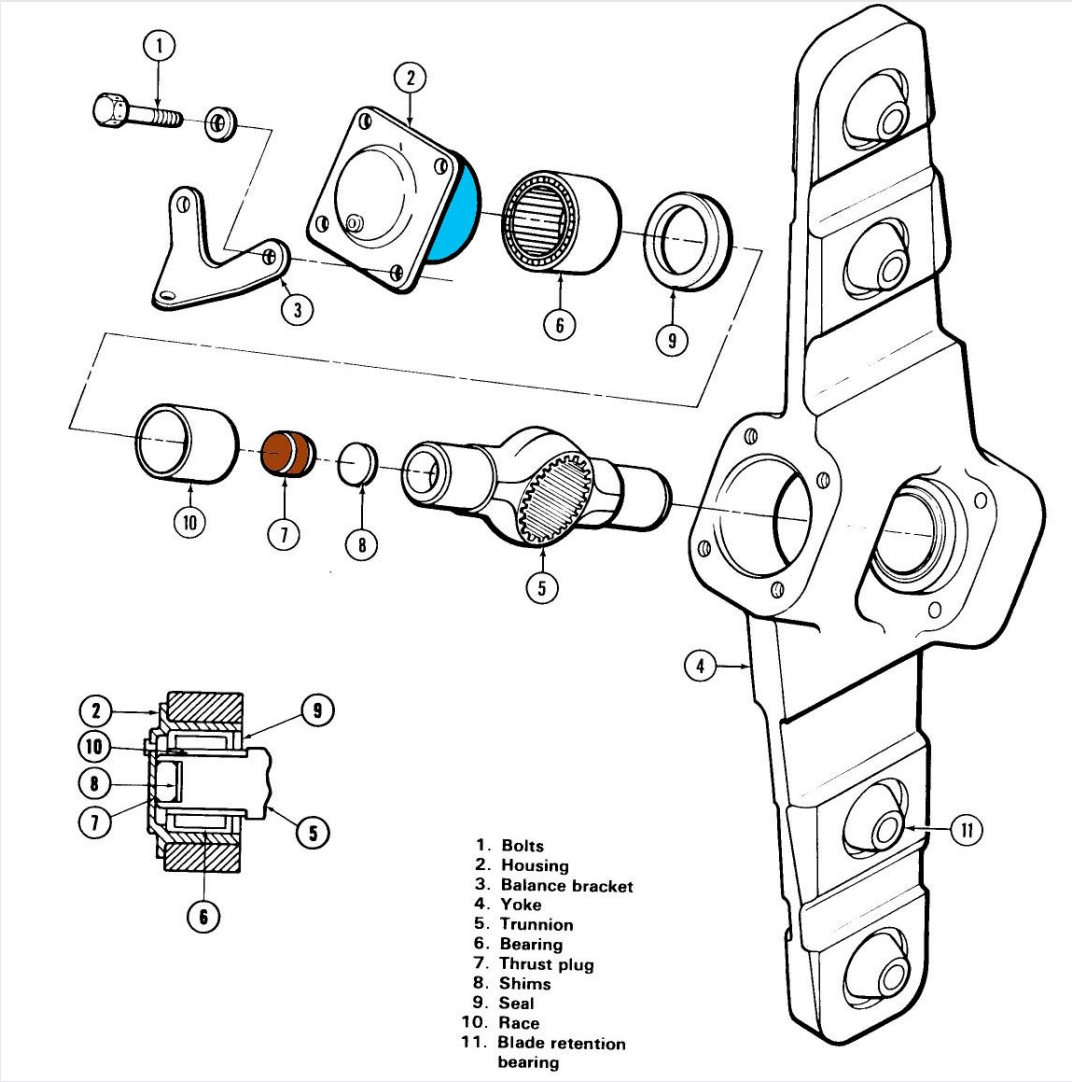

SP AND PRIOR TRUNNION CENTERING SHIMS AND THRUST PLUG

HUB BEARING REPLACEMENT

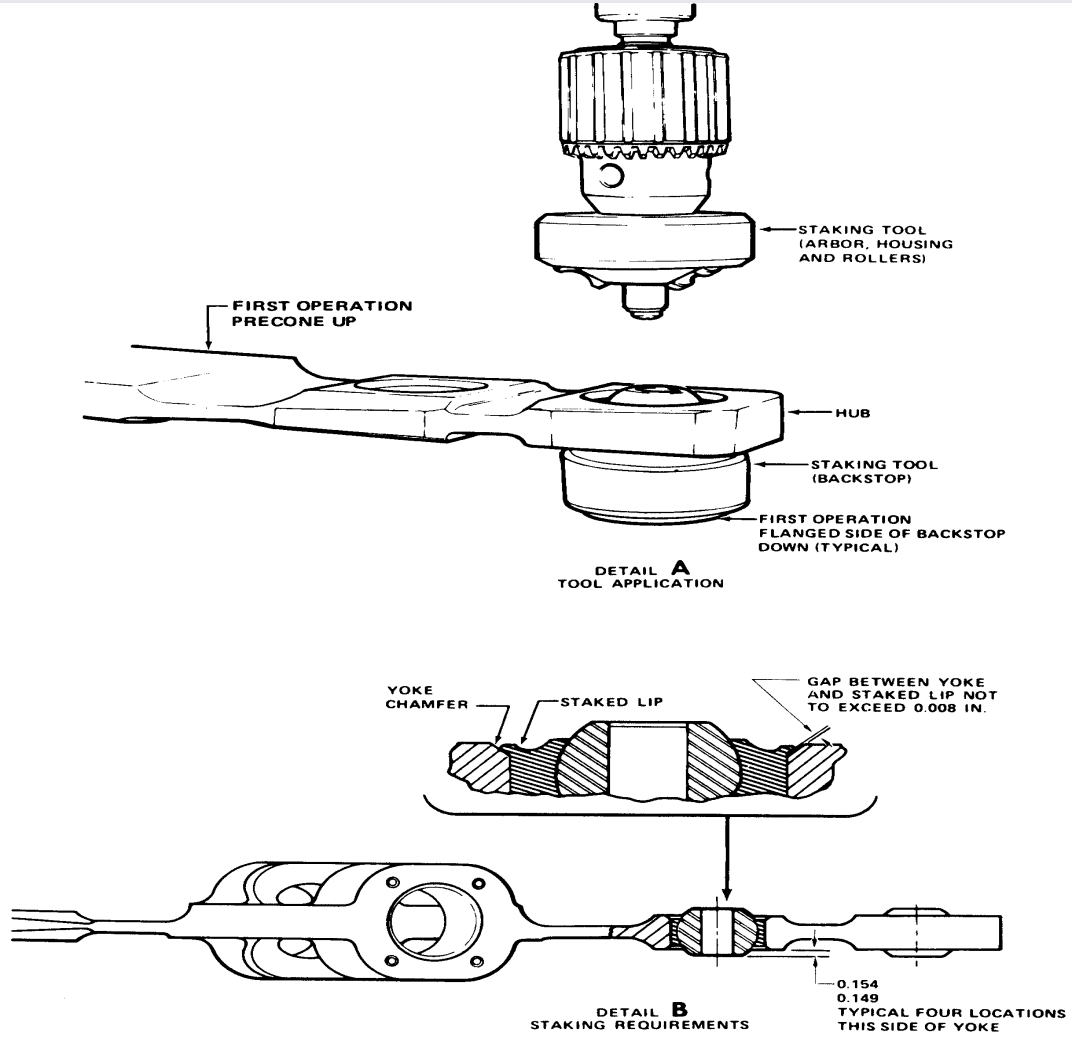

FEATHERING BEARING

HUB AND BLADE ASSEMBLY

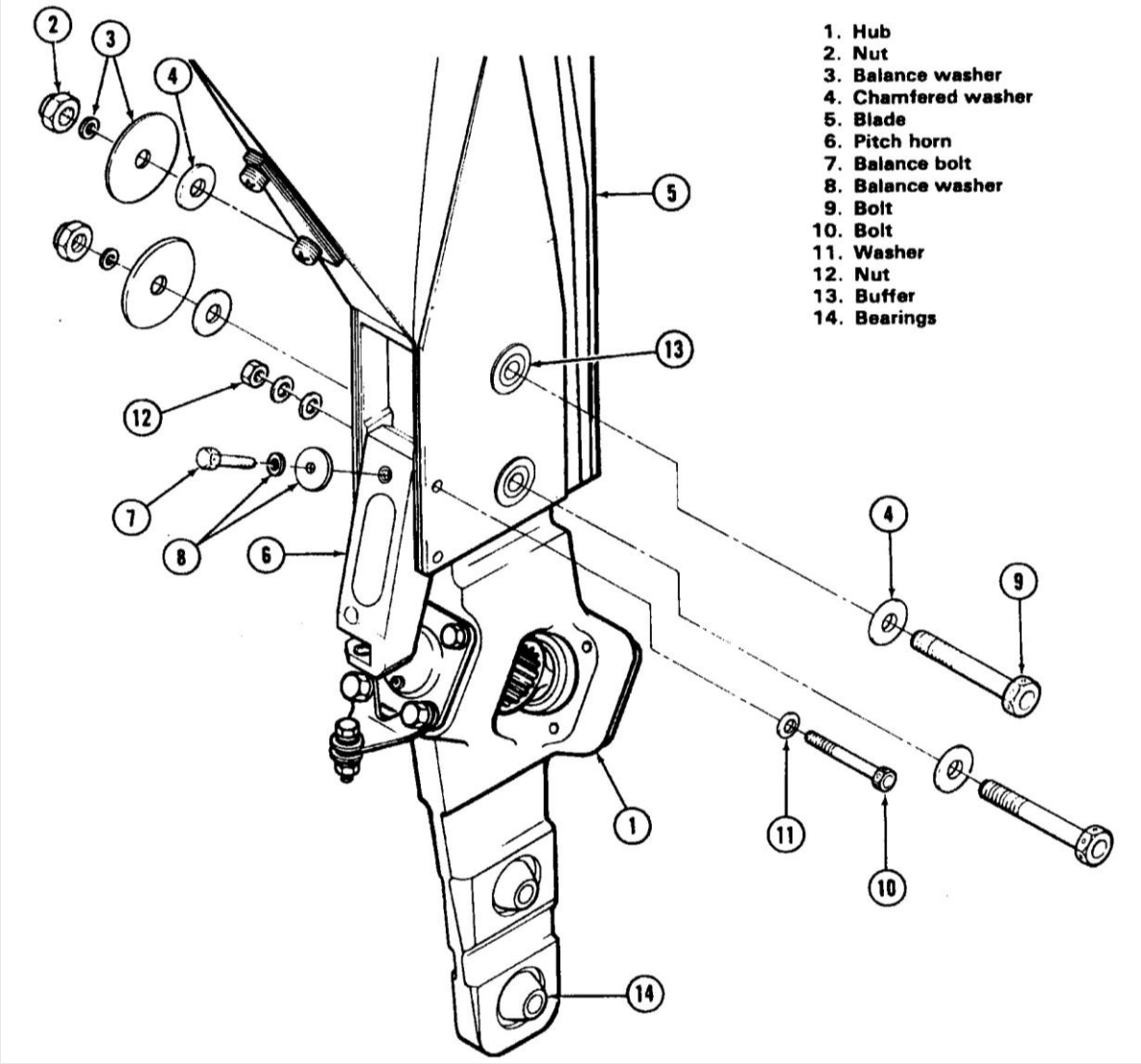

BLADE CONSTRUCTION

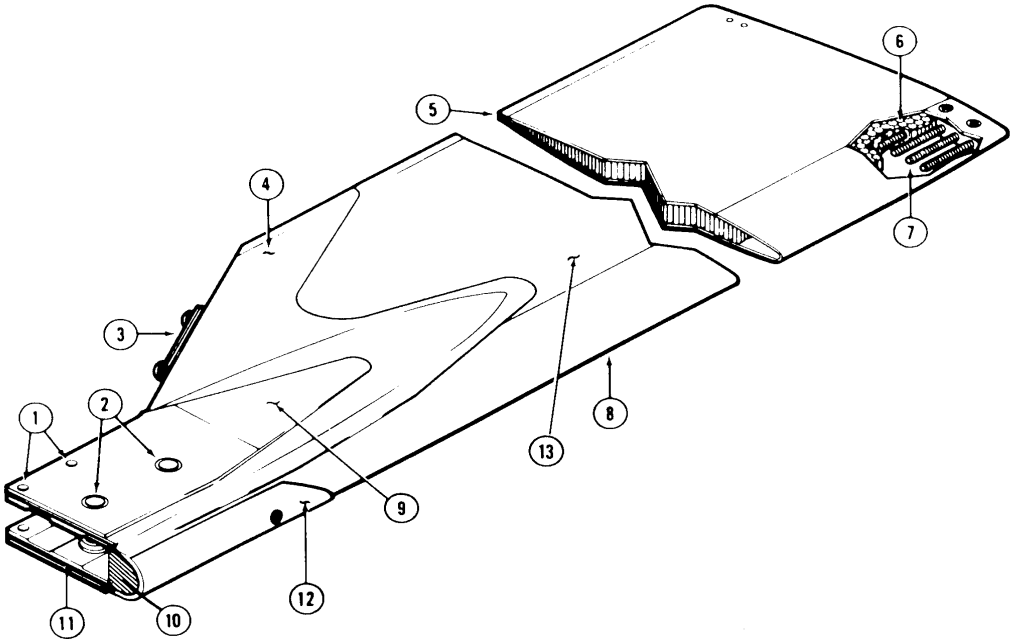

1. Pitch horn bolt holes
2. Blade grip bolt holes
3. Balance weights
4. Doubler
5. Trailing edge strip
6. Honeycomb
7. Balance screw
8. Spar
9. Grip plate
10. Butt block
11. Grip plate (inner)
12. Drain hole doubler
13. Skin

FACTORY WEIGHTS

FACTORY WEIGHTS

TIP CAP

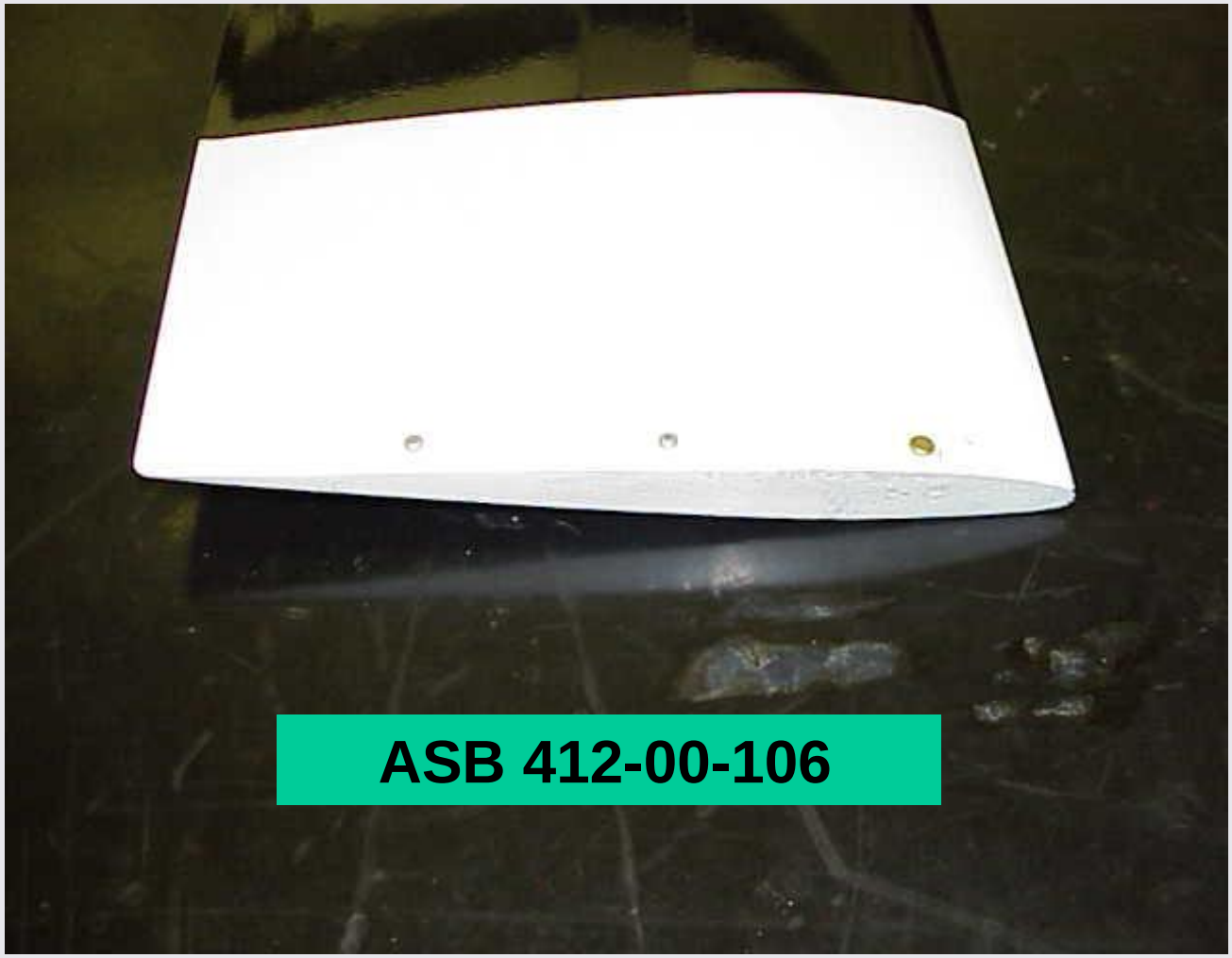

BLADE DAMAGE CRITERIA

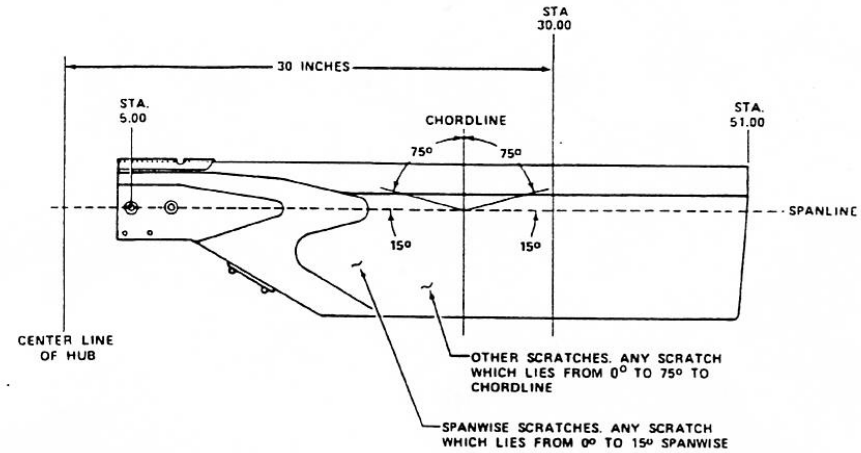

TAIL ROTOR BLADE REPAIR AREAS

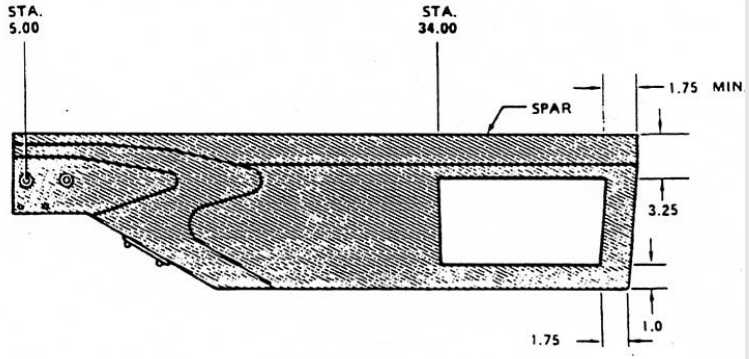

NO REPAIR PERMITTED IN HATCHED AREA EXCEPT
AS NOTED IN MANUAL.

STATIC BALANCE

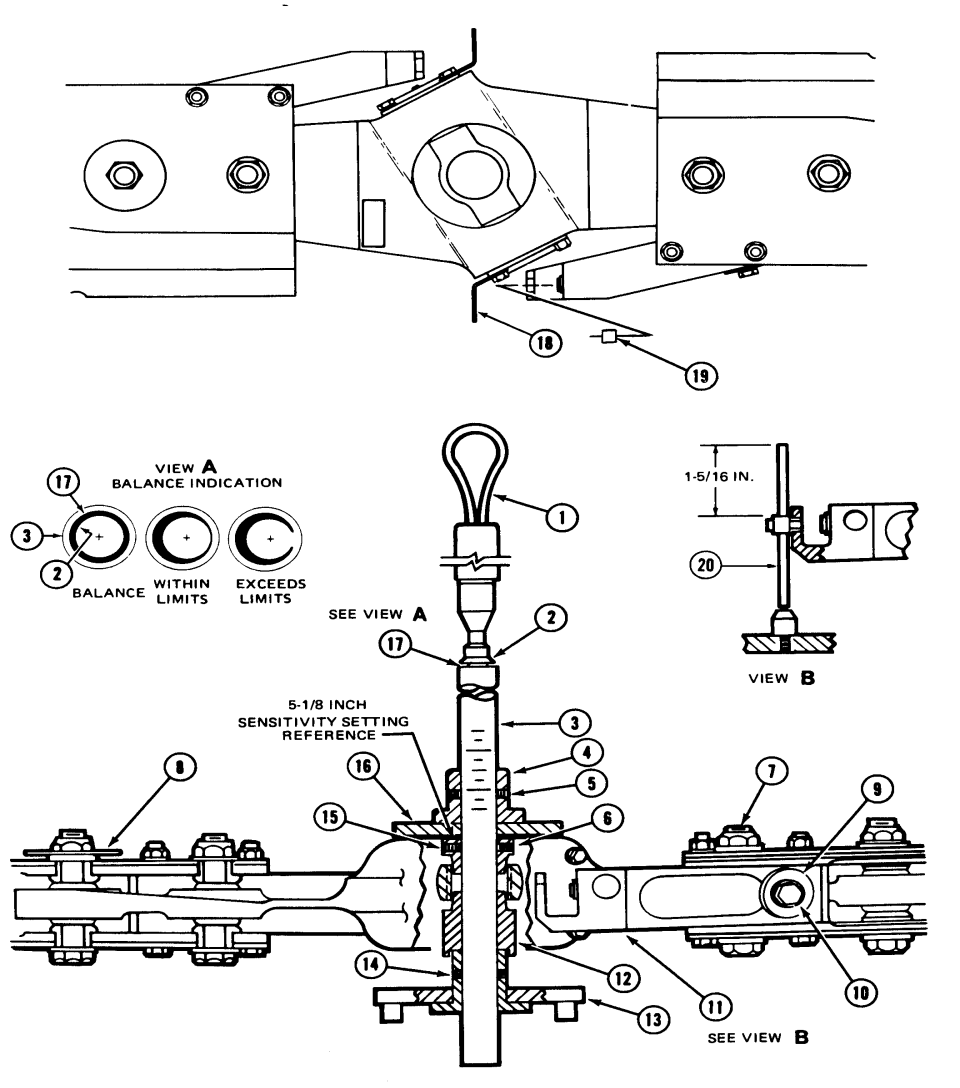

BALANCE

MARVEL BALANCE

412 REVIEW

1. The tail rotor blades can be changed ___individually___.

2. The yoke is ___Pre-coned___ 1°15' to relieve bending loads.

3. When the tail rotor assembly flaps, the angle between the yoke assembly and blade ___Does___ ___not___ change.

4. The flapping stop is located between the counterweight link support and the ___trunnion___.

5. The pitch horns are attached to the ___trailing___ edge side of the blades.

6. The delta hinge of the tail rotor provides the ___flapping___ axis for the tail rotor blades.

7. The tail rotor is an ___underslung___ feathering axis rotor.

8. The tail rotor yoke assembly is equipped with a total of ___4___ uniball (spherical) type bearings.

9. The trunnion is one piece, and is ___master___ splined.

10. Static chordwise balance of the tail rotor assembly is accomplished by adding or removing washers from the blade ___Pitch___ ___horns___.

11. The tail rotor is dynamically balanced spanwise by adding or removing washers attached to the blade ___retention___ bolts.

412 REVIEW (cont.)

12. The tail rotor must be dynamically balanced at each 180 day / 300 hour inspection.

13. When installing the tail rotor assembly, the pre-cone should be away from the tail fin.

14. When installing the crosshead bearing to the pitch change tube, inspect bearing for wear and Hand pack with MIL-G-81322 grease.

15. The brackets attached to the trunnion bearing housings are used to Dynamic balance (chordwise) the tail rotor.

16. The counterweights are installed to decrease the amount of pitch change.